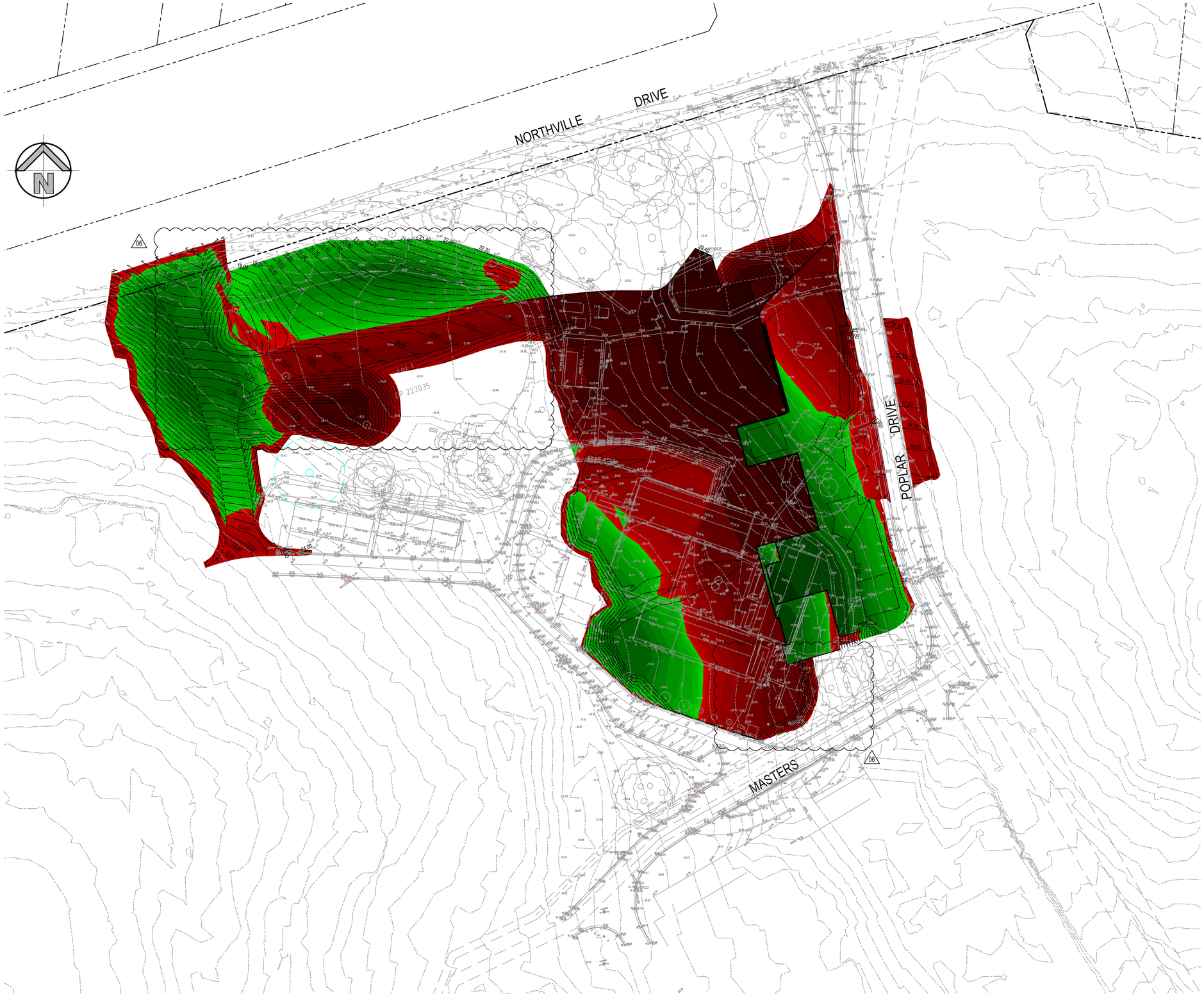

CUT & FILL DEPTH RANGE			
Lower_value		Upper_value	Colour
-3.0	to	-2.0	m
-2.0	to	-1.8	m
-1.8	to	-1.6	m
-1.6	to	-1.4	m
-1.4	to	-1.2	m
-1.2	to	-1.0	m
-1.0	to	-0.8	m
-0.8	to	-0.6	m
-0.6	to	-0.4	m
-0.4	to	-0.2	m
-0.2	to	0.00	m
0.000	to	0.2	m
0.2	to	0.4	m
0.4	to	0.6	m
0.6	to	0.8	m
0.8	to	1.0	m
1	to	1.2	m
1.2	to	1.4	m
1.4	to	9999	m

OVERALL EARTHWORKS QUANTITIES	
TOTAL AREA (12589 m²)	
CUT	14,391m³
FILL	3,945 m³
EXCESS OF CUT OVER FILL	10,446 m³

06

BULK EARTHWORKS GENERAL NOTES

A QUALIFIED GEOTCHNICAL ENGINEER IS TO PROVIDE FINAL ADVISE ON TEMPORARY BATTERS, EXISTING GROUND CONDITIONS, SITE TREATMENT AS WELL AS UNDERTAKE SUPERVISION.

THE LOCATIONS OF UNDERGROUND SERVICES SHOWN ON THESE DRAWINGS HAVE BEEN PLOTTED FROM SURVEY AND AUTHORITY INFORMATION. THE SERVICE INFORMATION HAS BEEN PREPARED ONLY TO SHOW THE APPROXIMATE POSITIONS OF ANY KNOWN SERVICES AND MAY NOT BE AS CONSTRUCTED OR ACCURATE.

HENRY AND HYMAS PTY LTD CANNOT GUARANTEE THAT THE SERVICES INFORMATION SHOWN ON THESE DRAWINGS, ACCURATELY INDICATES THE PRESENCE OR ABSENCE OF SERVICES OR THEIR LOCATION AND WILL ACCEPT NO LIABILITY FOR INACCURACIES IN THE SERVICES INFORMATION SHOWN ARISING FROM ANY CAUSE WHATSOEVER. CONTRACTORS ARE TO CONTACT THE RELEVANT SERVICE AUTHORITY PRIOR TO COMMENCEMENT OF EXCAVATION.
FOR COMMENCEMENT OF WORKS ON SITE, SEARCH RESULTS ARE TO BE KEPT ON SITE AT ALL TIMES.

ALL SERVICES ARE TO BE LOCATED AND CUT OFF PRIOR TO THE COMMENCEMENT OF EXCAVATION AND FILLING OPERATIONS.

ALL TOP SOIL, ORGANIC MATTER AND FILL MATERIAL SHALL BE REMOVED FROM ALL AREAS UNDER BUILDING AND CARPARK LOCATIONS TO THE SATISFACTION OF THE GEOTECHNICAL ENGINEER. AREAS TO BE FULLY STRIPPED OF EXISTING FILL AND DARK BROWN BLACK UPPER ORGANIC ALLUVIUM.

UPON COMPLETION OF STRIPPING AND PRIOR TO PLACEMENT OF FILL THE ENTIRE SITE SHALL BE PROOF ROLLED WITH A MINIMUM OF 6 PASSES OF A VIBRATOR PADFOOT ROLLER OF NOT LESS THEN 9 TONNE MINIMUM DEAD WEIGHT OR AS SPECIFIED IN THE GEOTECHNICAL REPORT. ANY SOFT OR HEAVING AREAS SHALL BE REMOVED TO THE SATISFACTION OF THE GEOTECHNICAL ENGINEER TO A MINIMUM DEPTH OF 500mm AND THEN BACKFILLED WITH APPROVED MATERIAL IN 200mm THICK LOOSE LAYERS COMPACTED TO 98% OF STANDARD MAX. DRY DENSITY AND TO WITHIN +/- 2% OF STANDARD OPTIMUM MOISTURE CONTENT. APPROVED BACKFILL MATERIAL MAY BE CRUSHED ROCK OR SANDY LOAM WITH A PLASTICITY INDEX LESS THAN 15%.

IMPORTED FILLING:
THE CONTRACTOR WILL IMPORT SUITABLE FILL FROM AN EXTERNAL SOURCE. EXCAVATION MATERIALS MEETING THE REQUIRED SPECIFICATION MAY BE USED AS FILL. THIS MAY INCLUDE RECYCLED MATERIALS IF THEY ARE SUITABLY BLENDED/CONDITIONED TO MEET MATERIALS SPECIFICATIONS.

0 10 20 30 40 50m
10 8 6 4 2
SCALE 1:500

BULK EARTHWORKS - CUT AND FILL PLAN

SCALE: 1:500

FOR DA ONLY

SURVEY INFORMATION
SURVEYED BY RPS
DATUM: A.H.D.

REVISION	AMENDMENT	DRAWN	DESIGNED	DATE	REVISION	AMENDMENT	DRAWN	DESIGNED	DATE
06	ISSUED FOR DA	MS	IA	16.07.2019					
05	ISSUED FOR DA	MC	IA	08.07.2019					
04	ISSUED FOR DA	MC	IA	29.06.2019					
03	ISSUED FOR DA	MC	IA	04.03.2019					
02	ISSUED FOR DA	MC	IA	20.02.2019					
01	ISSUED FOR DA	AB	IA	15.02.2019					

Client
ROYAL FREEMASONS' BENEVOLENT INSTITUTION

Architect
CALDER FLOWER ARCHITECTURE

This drawing and design remains the property of Henry & Hymas and may not be copied in whole or in part without the prior written approval of Henry & Hymas.

Level 5,
79 Victoria Avenue
Chatswood NSW 2067

Telephone
+61 2 9417 8400
Facsimile
+61 2 9417 8337
Email
email@hhconsult.com.au
Web
www.henryandhymas.com.au

henry&hymas

Project
HAWKINS VILLAGE
3 NORTHVILLE DRIVE EDGEWORTH NSW

Title
BULK EARTHWORKS
CUT AND FILL PLAN

Drawn	Designed	Date
I.Khachab	I.Ahmed	JAN 2019
Checked	Approved	Scale @A1
A.Francis	A.Francis	1:500

Drawing number: 17999_DA_BE01
Revision: 06

OVERALL SITE PLAN

SCALE: 1:500

LEGEND

- EXISTING BOUNDARY
- R — PROPOSED RIDGE LINE
- SW — EXISTING STORMWATER LINE
- SW — EXISTING STORMWATER LINE TO BE REMOVED
- PROPOSED STORMWATER PIPE
- E — EXISTING ELECTRICAL MAINS LINE
- G — EXISTING GAS LINE
- S — EXISTING SEWER LINE
- T — EXISTING TELSTRA LINES
- W — EXISTING WATER LINE
- PROPOSED JUNCTION PITS
- PROPOSED SURFACE INLET PITS
- PROPOSED LINTEL ONGRADE & SAG PITS
- EXISTING EASEMENTS
- K&G — PROPOSED KERB & GUTTER
- KO — PROPOSED KERB ONLY
- RW — PROPOSED RETAINING WALL
- PROPOSED BATTER LINE
- 27.5 — EXISTING CONTOURS
- 24.60 — PROPOSED CONTOURS
- A-1 — LINE LETTER, PIT NUMBER — PROPOSED PIT TAG
- IL19.62 — STORMWATER UPSTREAM INVERT RL.
- Ø300 — STORMWATER PIPE DIAMETER & CLASS
- 42.5m — STORMWATER PIPE LENGTH
- 1% — STORMWATER PIPE GRADE
- IL18.32 — STORMWATER DOWNSTREAM INVERT RL.
- RL20.40 — PROPOSED SPOT LEVEL
- RL24.46 — EXISTING SPOT LEVEL
- EXISTING STORMWATER PIT
- OIF — OVERLAND FLOW PATH
- DENOTED TREE PROTECTION ZONE

FOR DA ONLY

SURVEY INFORMATION
SURVEYED BY
RPS AUSTRALIA EAST PTY LTD
DATUM: A.H.D.

REVISION	AMENDMENT	DRAWN	DESIGNED	DATE
04	ISSUED FOR DA	MC	IA	09.07.2019
03	ISSUED FOR DA	MC	IA	04.03.2019
02	ISSUED FOR DA	MC	IA	20.02.2019
01	ISSUED FOR DA	MC	IA	15.02.2019

Client
ROYAL FREEMASONS' BENEVOLENT INSTITUTION

Architect
CALDER FLOWER ARCHITECTURE

This drawing and design remains the property of Henry & Hymas and may not be copied in whole or in part without the prior written approval of Henry & Hymas.

Level 5,
79 Victoria Avenue
Chatswood NSW 2067

Telephone +61 2 9417 8400
Facsimile +61 2 9417 8337
Email email@hhconsult.com.au
Web www.henryandhymas.com.au

henry&hymas

Project
HAWKINS VILLAGE
3 NORTHVILLE DRIVE EDGEWORTH NSW

Title
OVERALL SITE PLAN

Drawn	Designed	Date
I.Khachab	I.Ahmed	JAN 2019
Checked	Approved	Scale @A1
A.Francis	A.Francis	1:500

Drawing number: 17999_DA_C100
Revision: 04

A1

DETAIL PLAN - LEVEL

SCALE: 1:250

0 5 10 15 20 25m

5 4 3 2 1

SCALE 1:250

FOR DA ONLY

SURVEY INFORMATION
SURVEYED BY
RPS AUSTRALIA EAST PTY LTD
DATUM: A.H.D.

REVISION	AMENDMENT	DRAWN	DESIGNED	DATE
04	ISSUED FOR DA	MC	IA	02.08.2019
03	ISSUED FOR DA	MC	IA	04.03.2019
02	ISSUED FOR DA	MC	IA	20.02.2019
01	ISSUED FOR DA	MC	IA	15.02.2019

Client
ROYAL FREEMASONS' BENEVOLENT INSTITUTION

Architect
CALDER FLOWER ARCHITECTURE

This drawing and design remains the property of Henry & Hymas and may not be copied in whole or in part without the prior written approval of Henry & Hymas.

Level 5,
79 Victoria Avenue
Chatswood NSW 2067

Telephone
+61 2 9417 8400
Facsimile
+61 2 9417 8337
Email
email@hhconsult.com.au
Web
www.henryandhymas.com.au

henry&hymas

Project
HAWKINS VILLAGE
3 NORTHVILLE DRIVE EDGEWORTH NSW

Title
DETAIL PLAN - LEVEL 1
SHEET 1 OF 2

Drawn	Designed	Date
I.Khachab	I.Ahmed	JAN 2019
Checked	Approved	Scale @A1
A.Francis	A.Francis	1:250

Drawing number: 17999_DA_C101

Revision: 04

A1

FOR CONTINUATION REFER TO DWG.17999_DA_C101

IL15.80
Ø375
18m
5%
IL14.90

IL13.54
Ø375
14m
8%
IL12.50

IL12.48
Ø375
22m
4%
IL11.50

OVERLAND FLOW PATH TO EXISTING SWALE

4.8m SPILLWAY RL 16.80

100 YEAR ARI

ABOVE OSD TANK, REFER TO DWG C203

EXTEND OF THE ROAD TO BE DEMOLISHED

LANDSCAPE TO BE DESIGNED BY LANDSCAPE ARCHITECT

OCEAN PROTECT 3x690mm CARTRIDGE STORMFILTER SYSTEM

TPZ LINE OF EXISTING TREE

EXISTING SWALES TO REMAIN

EXISTING PIT TO REMAIN

PROPOSED LIMIT OF WORK

CONSTURCT KERB ONLY

EXISTING ROAD TO BE RETAINED

ALL ROOFWATER TO RAINWATER TANK TO FUTURE HYDRAULIC DETAILS

FFL20.50

NEW ROAD TO TIE IN WITH EXISTING LEVELS

LOCATION AND LEVEL OF EXISTING KERB TO BE CONFIRMED BY SURVEYOR

LOCATION OF EXISTING PIT TO BE CONFIRMED BY SURVEYOR

PROPOSED OSD TANK 1, REFER TO DRAWING C201-C202 FOR DETAILS AND SECTIONS

DOWNPIPES TO OSD TANK 1 TO FUTURE HYDRAULIC DETIALS

EXISTING STORMWATER PIT TO BE RETAINED

DOWNPIPES FROM ROOF TO RAINWATER TANK TO FUTURE HYDRAULIC DETAILS

LANDSCAPE TO BE DESIGNED BY LANDSCAPE ARCHITECT

CONSTURCT KERB ONLY

PROPOSED LIMIT OF WORK

RETAINING WALL TO FUTURE STRUCTURAL DETAILS

LANDSCAPE TO BE DESIGNED BY LANDSCAPE ARCHITECT

EXTENT OF THE ROAD TO BE DEMOLISHED

PROVIDE BALUSTRADE TO ARCHITECTS DETAILS

CONSTRUCT KERB AND GUTTER

MASTERS DRIVE

DETAIL PLAN - LEVEL 1

SCALE: 1:250

0 5 10 15 20 25m

5 4 3 2 1

SCALE 1:250

FOR DA ONLY

SURVEY INFORMATION
SURVEYED BY
RPS AUSTRALIA EAST PTY LTD
DATUM: A.H.D.

REVISION	AMENDMENT	DRAWN	DESIGNED	DATE
04	ISSUED FOR DA	MC	IA	09.07.2019
03	ISSUED FOR DA	MC	IA	04.03.2019
02	ISSUED FOR DA	MC	IA	20.02.2019
01	ISSUED FOR DA	MC	IA	15.02.2019

Client
ROYAL FREEMASONS' BENEVOLENT INSTITUTION

Architect
CALDER FLOWER ARCHITECTURE

This drawing and design remains the property of Henry & Hymas and may not be copied in whole or in part without the prior written approval of Henry & Hymas.

Level 5,
79 Victoria Avenue
Chatswood NSW 2067

Telephone +61 2 9417 8400
Facsimile +61 2 9417 8337
Email email@hhconsult.com.au
Web www.henryandhymas.com.au

henry&hymas

Project
HAWKINS VILLAGE
3 NORTHVILLE DRIVE EDGEWORTH NSW

Title
DETAIL PLAN - LEVEL 1
SHEET 2 OF 2

Drawn	Designed	Date
I.Khachab	I.Ahmed	JAN 2019
Checked	Approved	Scale @A1
A.Francis	A.Francis	1:250

Drawing number: 17999_DA_C102

Revision: 04

A1

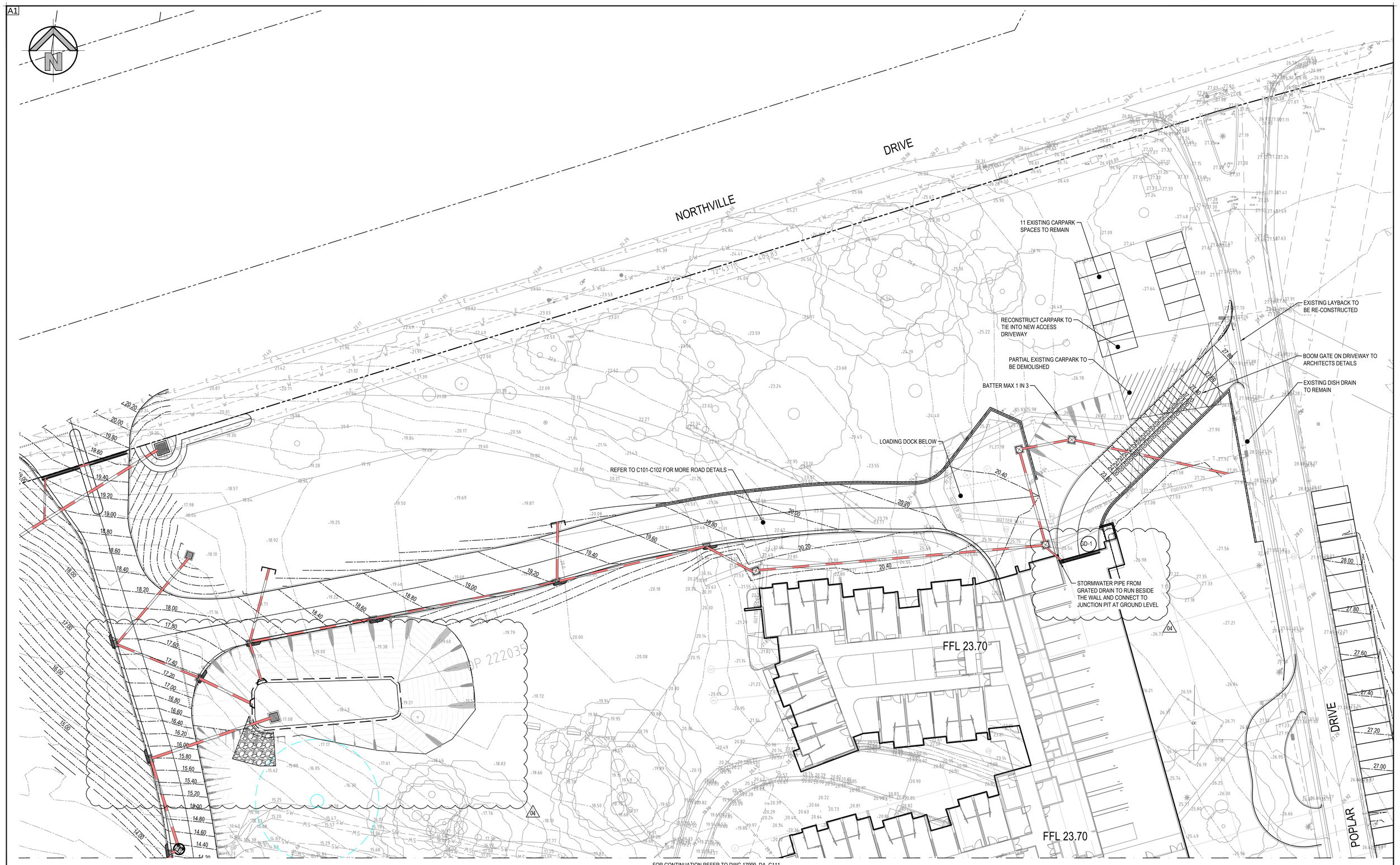

FOR CONTINUATION REFER TO DWG.17999_DA_C111

DETAIL PLAN - LEVEL 2

SCALE: 1:250

0 5 10 15 20 25m

5 4 3 2 1

SCALE 1:250

FOR DA ONLY

SURVEY INFORMATION
SURVEYED BY RPS
DATUM: A.H.D.

REVISION	AMENDMENT	DRAWN	DESIGNED	DATE	REVISION	AMENDMENT	DRAWN	DESIGNED	DATE
04	ISSUED FOR DA	MC	IA	09.07.2019					
03	ISSUED FOR DA	MC	IA	04.03.2019					
02	ISSUED FOR DA	MC	IA	20.02.2019					
01	ISSUED FOR DA	MC	IA	15.02.2019					

Client
ROYAL FREEMASONS' BENEVOLENT INSTITUTION

Architect
CALDER FLOWER ARCHITECTURE

This drawing and design remains the property of Henry & Hymas and may not be copied in whole or in part without the prior written approval of Henry & Hymas.

Level 5,
79 Victoria Avenue
Chatswood NSW 2067

Telephone +61 2 9417 8400
Facsimile +61 2 9417 8337
Email email@hhconsult.com.au
Web www.henryandhymas.com.au

henry&hymas

Project
HAWKINS VILLAGE
3 NORTHVILLE DRIVE EDGEWORTH NSW

Title
DETAIL PLAN - LEVEL 2
SHEET 1 OF 2

Drawn	Designed	Date
I.Khachab	I.Ahmed	JAN 2019
Checked	Approved	Scale @A1
A.Francis	A.Francis	1:250

Drawing number: 17999_DA_C110

Revision: 04

A1

FOR CONTINUATION REFER TO DWG.17999_DA_C110

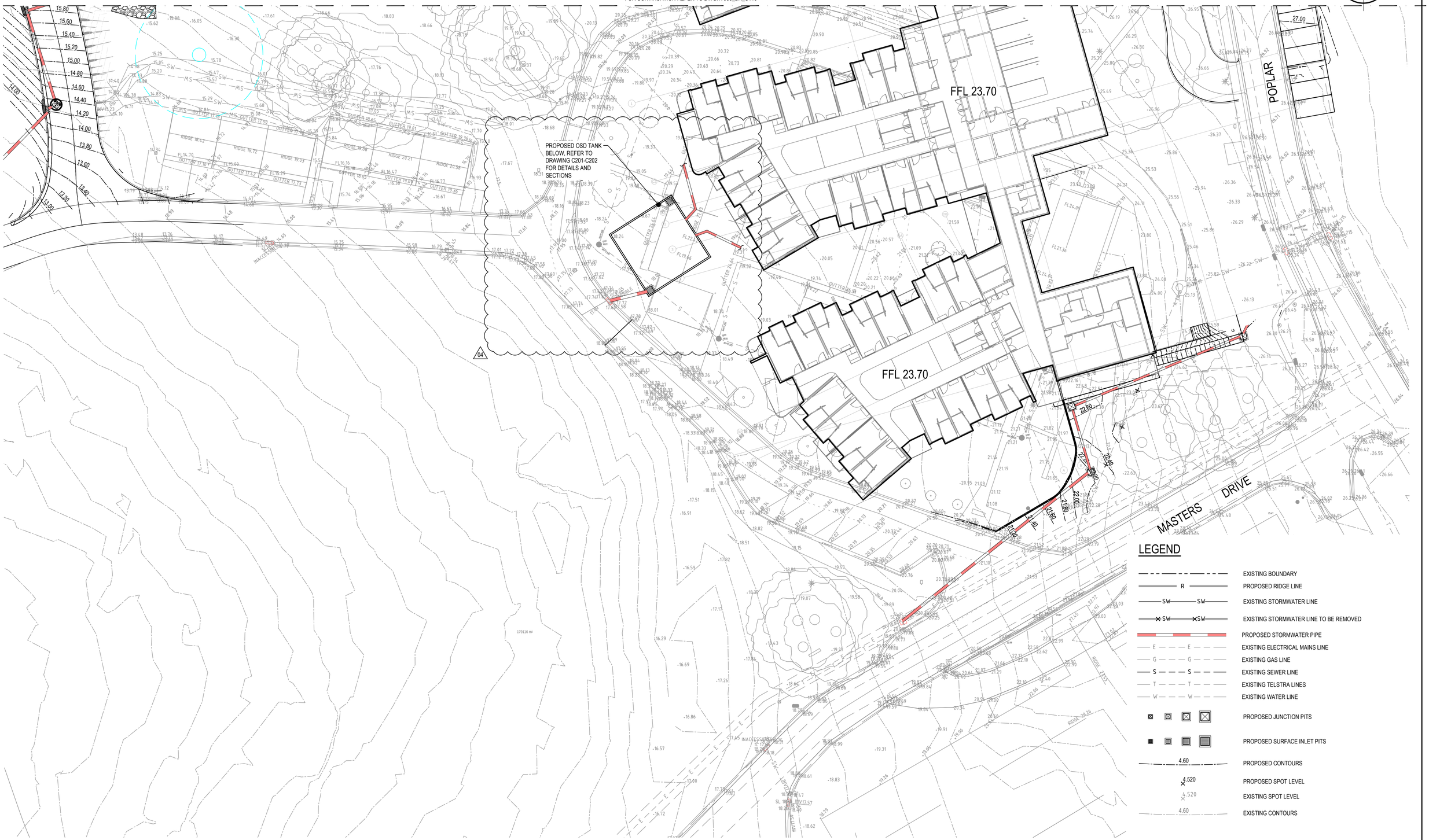

LEGEND

- EXISTING BOUNDARY
- PROPOSED RIDGE LINE
- EXISTING STORMWATER LINE
- EXISTING STORMWATER LINE TO BE REMOVED
- PROPOSED STORMWATER PIPE
- EXISTING ELECTRICAL MAINS LINE
- EXISTING GAS LINE
- EXISTING SEWER LINE
- EXISTING TELSTRA LINES
- EXISTING WATER LINE
- PROPOSED JUNCTION PITS
- PROPOSED SURFACE INLET PITS
- PROPOSED CONTOURS
- PROPOSED SPOT LEVEL
- EXISTING SPOT LEVEL
- EXISTING CONTOURS

DETAIL PLAN - LEVEL 2

SCALE: 1:250

0 5 10 15 20 25m

5 4 3 2 1

SCALE 1:250

FOR DA ONLY

SURVEY INFORMATION
SURVEYED BY RPS
DATUM: A.H.D.

REVISION	AMENDMENT	DRAWN	DESIGNED	DATE	REVISION	AMENDMENT	DRAWN	DESIGNED	DATE
04	ISSUED FOR DA	MC	IA	09.07.2019					
03	ISSUED FOR DA	MC	IA	04.03.2019					
02	ISSUED FOR DA	MC	IA	20.02.2019					
01	ISSUED FOR DA	MC	IA	15.02.2019					

Client
ROYAL FREEMASONS' BENEVOLENT INSTITUTION

Architect
CALDER FLOWER ARCHITECTURE

This drawing and design remains the property of Henry & Hymas and may not be copied in whole or in part without the prior written approval of Henry & Hymas.

Level 5,
79 Victoria Avenue
Chatswood NSW 2067

Telephone +61 2 9417 8400
Facsimile +61 2 9417 8337
Email email@hhconsult.com.au
Web www.henryandhymas.com.au

henry&hymas

Project
HAWKINS VILLAGE
3 NORTHVILLE DRIVE EDGEWORTH NSW

Title
DETAIL PLAN - LEVEL 2
SHEET 2 OF 2

Drawn	Designed	Date
I.Khachab	I.Ahmed	JAN 2019
Checked	Approved	Scale @A1
A.Francis	A.Francis	1:250

Drawing number: 17999_DA_C111

Revision: 04

A1

FOR CONTINUATION REFER TO DWG.17999_DA_C121

DETAIL PLAN - LEVEL 3

SCALE: 1:250

0 5 10 15 20 25m

5 4 3 2 1

SCALE 1:250

FOR DA ONLY

SURVEY INFORMATION
SURVEYED BY
RPS AUSTRALIA EAST PTY LTD
DATUM: A.H.D.

REVISION	AMENDMENT	DRAWN	DESIGNED	DATE
04	ISSUED FOR DA	MC	IA	08.07.2019
03	ISSUED FOR DA	MC	IA	04.03.2019
02	ISSUED FOR DA	MC	IA	20.02.2019
01	ISSUED FOR DA	MC	IA	15.02.2019

Client
ROYAL FREEMASONS' BENEVOLENT INSTITUTION

Architect
CALDER FLOWER ARCHITECTURE

This drawing and design remains the property of Henry & Hymas and may not be copied in whole or in part without the prior written approval of Henry & Hymas.

Level 5,
79 Victoria Avenue
Chatswood NSW 2067

Telephone +61 2 9417 8400
Facsimile +61 2 9417 8337
Email email@hhconsult.com.au
Web www.henryandhymas.com.au

henry&hymas

Project
HAWKINS VILLAGE
3 NORTHVILLE DRIVE EDGEWORTH NSW

Title
DETAIL PLAN - LEVEL 3
SHEET 1 OF 2

Drawn	Designed	Date
I.Khachab	I.Ahmed	JAN 2019
Checked	Approved	Scale @A1
A.Francis	A.Francis	1:250

Drawing number: 17999_DA_C120

Revision: 04

A1

FOR CONTINUATION REFER TO DWG.17999_DA_C120

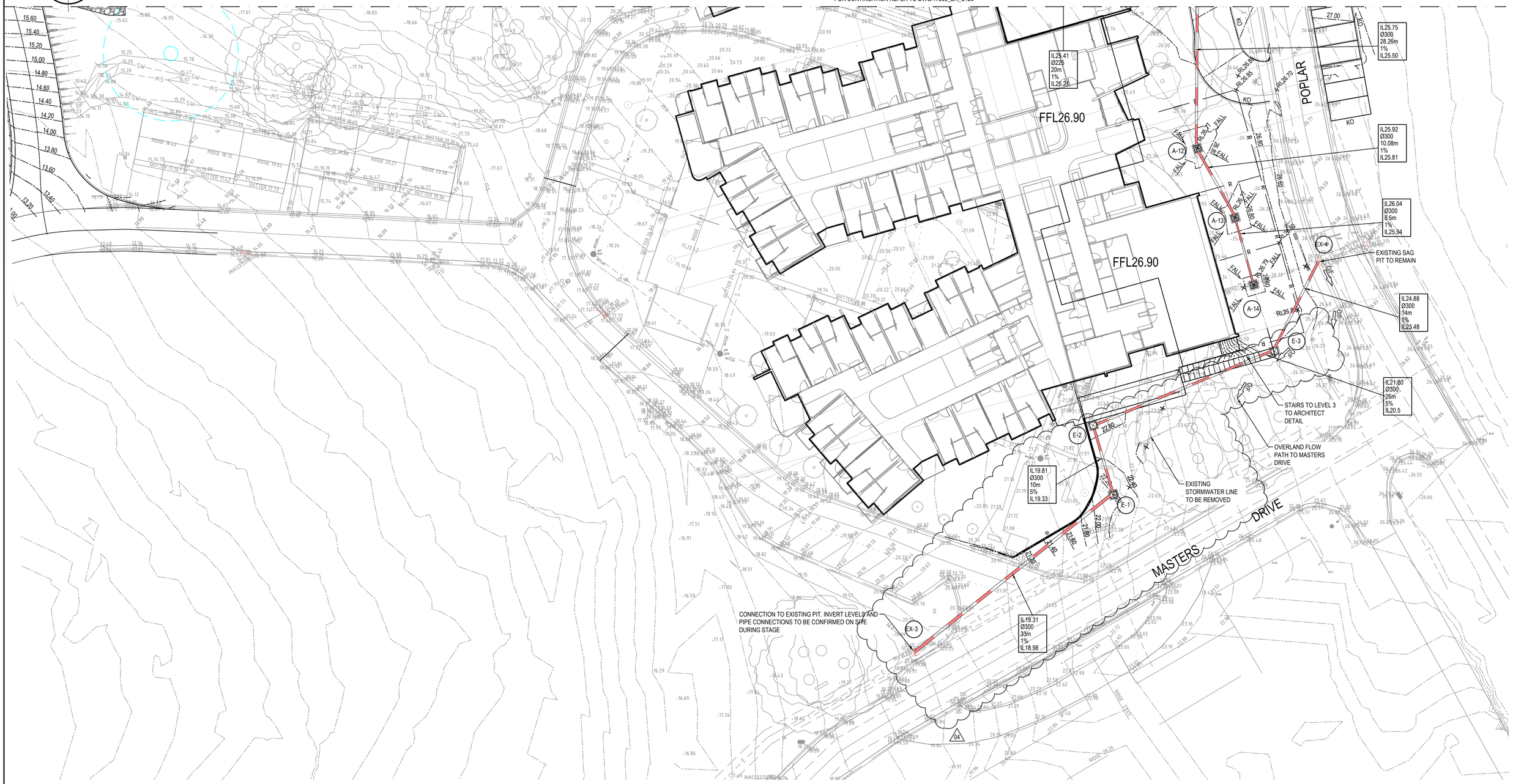

DETAIL PLAN - LEVEL 3

SCALE: 1:250

0 5 10 15 20 25m

5 4 3 2 1

SCALE 1:250

FOR DA ONLY

SURVEY INFORMATION
SURVEYED BY
RPS AUSTRALIA EAST PTY LTD
DATUM: A.H.D.

REVISION	AMENDMENT	DRAWN	DESIGNED	DATE	REVISION	AMENDMENT	DRAWN	DESIGNED	DATE
04	ISSUED FOR DA	MC	IA	08.07.2019					
03	ISSUED FOR DA	MC	IA	04.03.2019					
02	ISSUED FOR DA	MC	IA	20.02.2019					
01	ISSUED FOR DA	MC	IA	15.02.2019					

Client
ROYAL FREEMASONS' BENEVOLENT INSTITUTION

Architect
CALDER FLOWER ARCHITECTURE

This drawing and design remains the property of Henry & Hymas and may not be copied in whole or in part without the prior written approval of Henry & Hymas.

Level 5,
79 Victoria Avenue
Chatswood NSW 2067

Telephone +61 2 9417 8400
Facsimile +61 2 9417 8337
Email email@hhconsult.com.au
Web www.henryandhymas.com.au

henry&hymas

Project
HAWKINS VILLAGE
3 NORTHVILLE DRIVE EDGEWORTH NSW

Title
DETAIL PLAN - LEVEL 3
SHEET 2 OF 2

Drawn	Designed	Date
I.Khachab	I.Ahmed	JAN 2019
Checked	Approved	Scale @A1
A.Francis	A.Francis	1:250

Drawing number: 17999_DA_C121

Revision: 04

LEGEND

	EXISTING BOUNDARY
E	EXISTING ELECTRICAL MAINS LINE
G	EXISTING GAS LINE
S	EXISTING SEWER LINE
T	EXISTING TELSTRA LINES
W	EXISTING WATER LINE
27.5	EXISTING CONTOURS
RL20.40	PROPOSED SPOT LEVEL
RL24.46	EXISTING SPOT LEVEL
	EXISTING STORMWATER PIT

STORMWATER FLOW SUMMARY FOR EXISTING OSD

ARI (YEAR)	PRE (L/s)	POST (L/s)
5	18	7
20	24	7

02

0 5 10 15 20 25m
5 4 3 2 1
SCALE 1:250

EXISTING MEDICAL CENTRE - ADDITIONAL CARPARK SPACES

SCALE: 250

FOR DA ONLY

SURVEY INFORMATION
SURVEYED BY
RPS AUSTRALIA EAST PTY LTD
DATUM: A.H.D.

REVISION	AMENDMENT	DRAWN	DESIGNED	DATE
02	ISSUED FOR DA	MC	IA	09.07.2019
01	ISSUED FOR DA	MC	IA	04.03.2019

Client
ROYAL FREEMASONS' BENEVOLENT INSTITUTION

Architect
CALDER FLOWER ARCHITECTURE

This drawing and design remains the property of Henry & Hymas and may not be copied in whole or in part without the prior written approval of Henry & Hymas.

Level 5,
79 Victoria Avenue
Chatswood NSW 2067

Telephone +61 2 9417 8400
Facsimile +61 2 9417 8337
Email email@hhconsult.com.au
Web www.henryandhymas.com.au

henry&hymas

Project
HAWKINS VILLAGE
3 NORTHVILLE DRIVE EDGEWORTH NSW

Title
EXISTING MEDICAL CENTRE - ADDITIONAL CARPARK SPACES

Drawn	Designed	Date
I.Khachab	I.Ahmed	JAN 2019
Checked	Approved	Scale @A1
A.Francis	A.Francis	1:250

Drawing number: 17999_DA_C130
Revision: 02

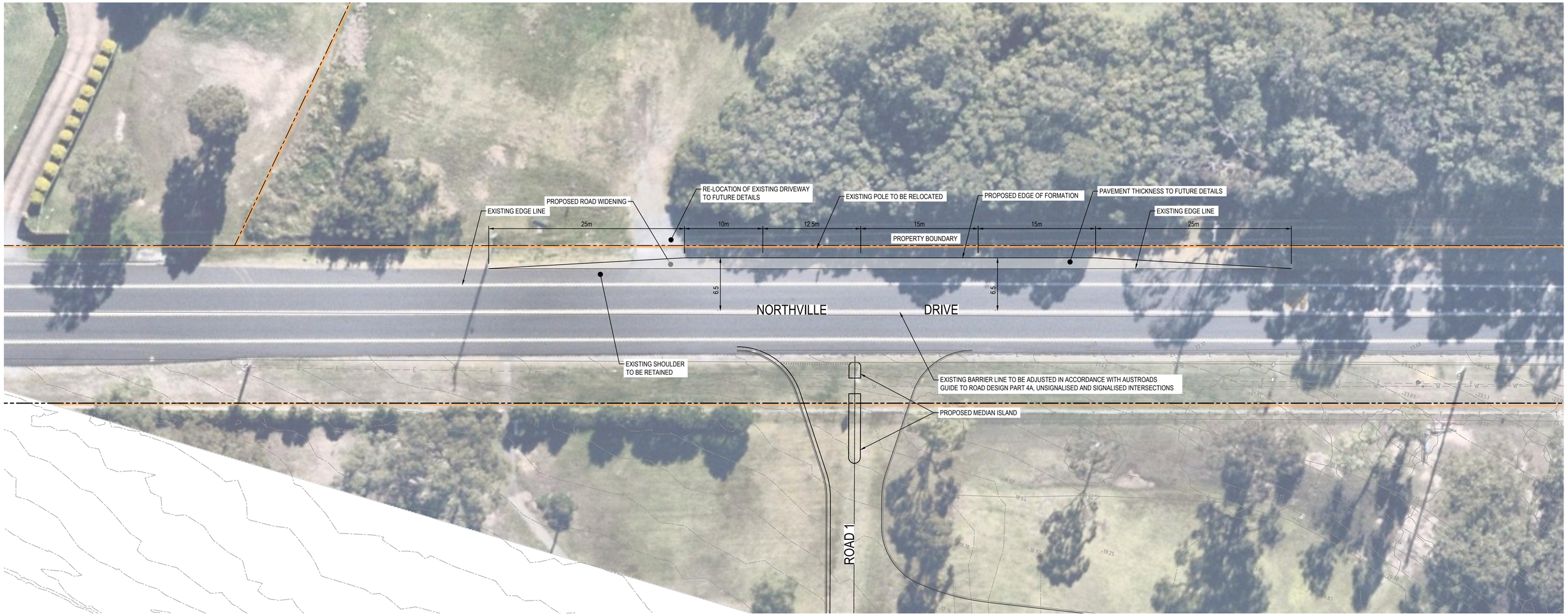

NORTHVILLE DRIVE ENTRANCE / RIGHT TURN LANE LAYOUT

SCALE: 1:250

0 5 10 15 20 25m
5 4 3 2 1
SCALE 1:250

FOR DA ONLY

SURVEY INFORMATION
SURVEYED BY
RPS AUSTRALIA EAST PTY LTD
DATUM: A.H.D.

REVISION	AMENDMENT	DRAWN	DESIGNED	DATE	REVISION	AMENDMENT	DRAWN	DESIGNED	DATE
01	ISSUED FOR DA	JK	IA	02.08.2019					

Client
ROYAL FREEMASONS' BENEVOLENT INSTITUTION

Architect
CALDER FLOWER ARCHITECTURE

This drawing and design remains the property of Henry & Hymas and may not be copied in whole or in part without the prior written approval of Henry & Hymas.

Level 5,
79 Victoria Avenue
Chatswood NSW 2067

Telephone
+61 2 9417 8400
Facsimile
+61 2 9417 8337
Email
email@hhconsult.com.au
Web
www.henryandhymas.com.au

henry&hymas

Project
HAWKINS VILLAGE
3 NORTHVILLE DRIVE EDGEWORTH NSW

Title
NORTHVILLE DRIVE ENTRANCE /
RIGHT TURN LANE LAYOUT

Drawn	Designed	Date
I.Khachab	I.Ahmed	JAN 2019
Checked	Approved	Scale @A1
A.Francis	A.Francis	1:250

Drawing number
17999_DA_C131

Revision
01

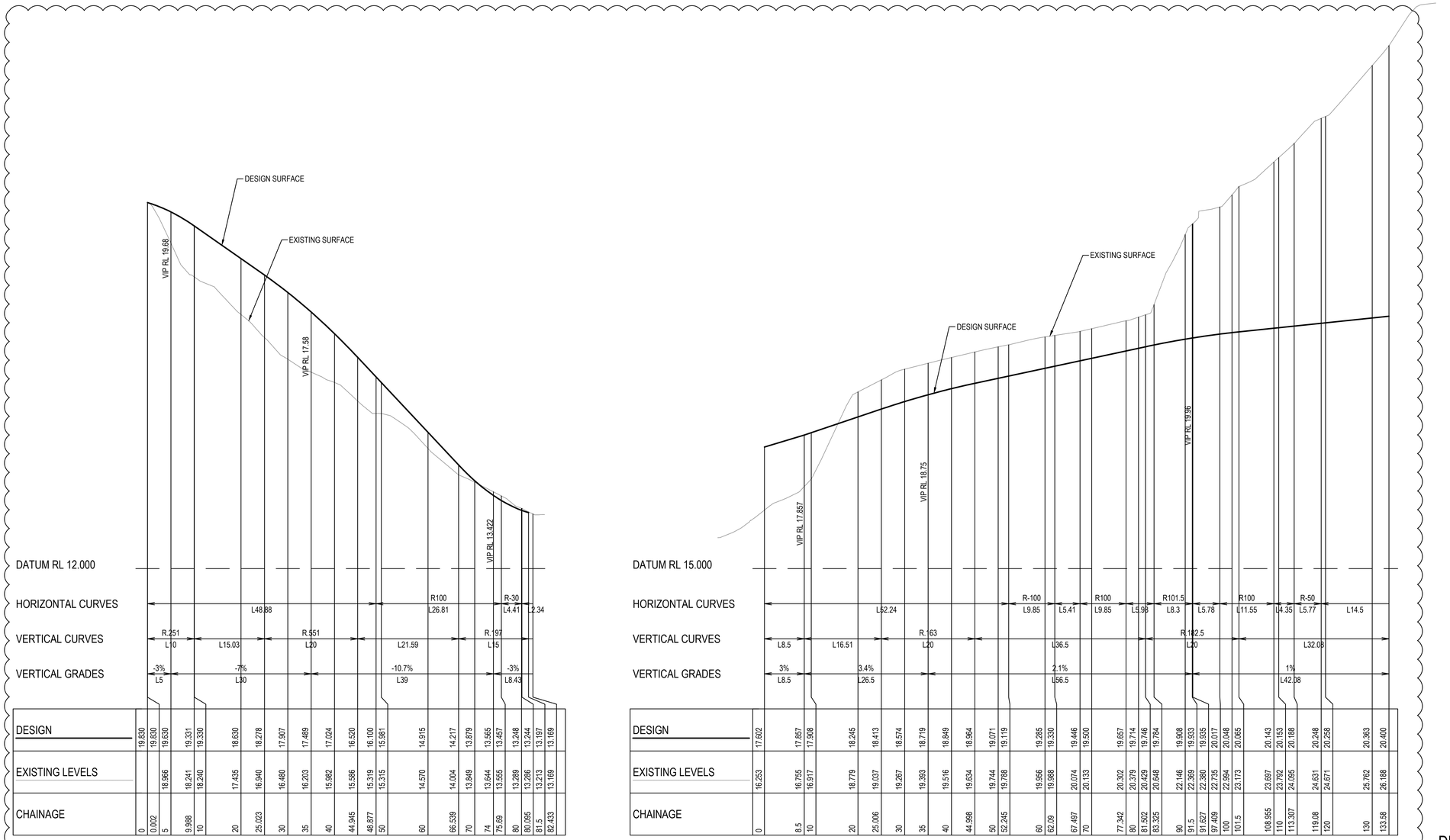

ROAD 1 - LONGITUDINAL SECTION

A1 HORZ SCALE 1:500
A1 VERT SCALE 1:50

ROAD 2 - LONGITUDINAL SECTION

A1 HORZ SCALE 1:500
A1 VERT SCALE 1:50

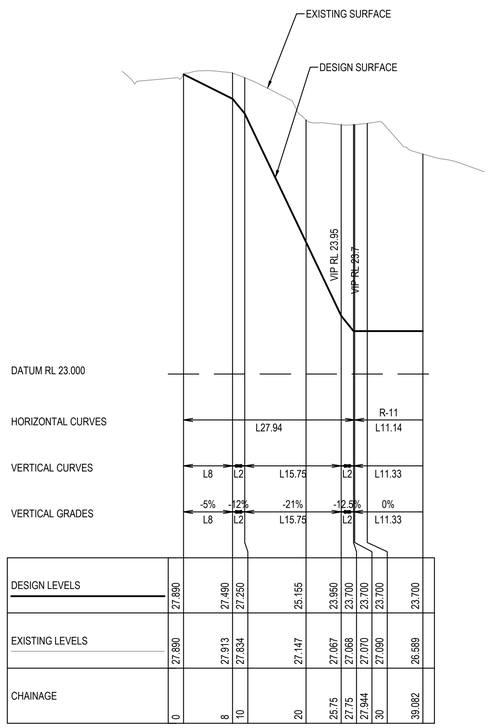

DRIVEWAY RAMP TO LEVEL 2 CARPARK LONGITUDINAL SECTION

A1 HORZ SCALE 1:500
A1 VERT SCALE 1:50

04

0 1000 2000 3000 4000 5000mm
1000 600 200
SCALE 1:50

0 10 20 30 40 50m
10 8 6 4 2
SCALE 1:500

FOR DA ONLY

SURVEY INFORMATION
SURVEYED BY
RPS AUSTRALIA EAST PTY LTD
DATUM: A.H.D.

REVISION	AMENDMENT	DRAWN	DESIGNED	DATE	REVISION	AMENDMENT	DRAWN	DESIGNED	DATE
04	ISSUED FOR DA	MC	IA	09.07.2019					
03	ISSUED FOR DA	MC	IA	04.03.2019					
02	ISSUED FOR DA	MC	IA	20.02.2019					
01	ISSUED FOR DA	MC	IA	15.02.2019					

Client
ROYAL FREEMASONS' BENEVOLENT INSTITUTION

Architect
CALDER FLOWER ARCHITECTURE

This drawing and design remains the property of Henry & Hymas and may not be copied in whole or in part without the prior written approval of Henry & Hymas.

Level 5,
79 Victoria Avenue
Chatswood NSW 2067

Telephone +61 2 9417 8400
Facsimile +61 2 9417 8337
Email email@hhconsult.com.au
Web www.henryandhymas.com.au

henry&hymas

Project
HAWKINS VILLAGE
3 NORTHVILLE DRIVE EDGEWORTH NSW

Title
ROAD LONGITUDINAL SECTIONS

Drawn	Designed	Date
M.Cerna	I.Ahmed	JAN 2019
Checked	Approved	Scale @A1
A.Francis	A.Francis	AS NOTED

Drawing number: 17999_DA_C150
Revision: 04

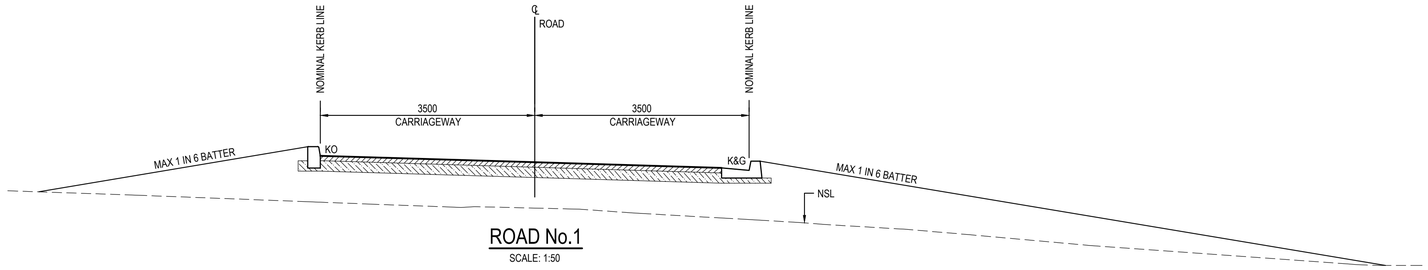

ROAD No.1

SCALE: 1:50

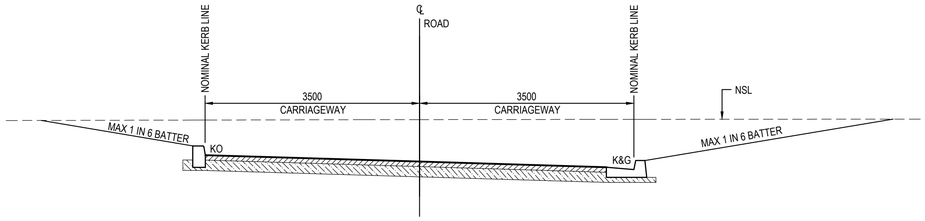

ROAD No.2

SCALE: 1:50

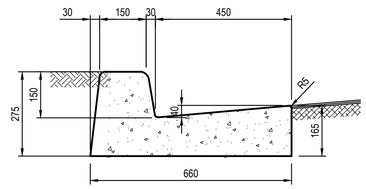

KERB & GUTTER, TYPICAL DETAIL (K&G)

SCALE 1:10

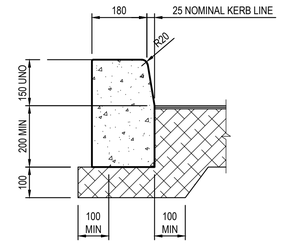

KERB ONLY, TYPICAL DETAIL(KO)

SCALE 1:10

03

0 200 400 600 800 1000mm
200 100
SCALE 1:10

0 1000 2000 3000 4000 5000mm
1000 600 200
SCALE 1:50

FOR DA ONLY

SURVEY INFORMATION
SURVEYED BY
RPS AUSTRALIA EAST PTY LTD
DATUM: A.H.D.

REVISION	AMENDMENT	DRAWN	DESIGNED	DATE	REVISION	AMENDMENT	DRAWN	DESIGNED	DATE
03	ISSUED FOR DA	MC	IA	09.07.2019					
02	ISSUED FOR DA	MC	IA	04.03.2019					
01	ISSUED FOR DA	MC	IA	15.02.2019					

Client
ROYAL FREEMASONS' BENEVOLENT INSTITUTION

Architect
CALDER FLOWER ARCHITECTURE

This drawing and design remains the property of Henry & Hymas and may not be copied in whole or in part without the prior written approval of Henry & Hymas.

Level 5,
79 Victoria Avenue
Chatswood NSW 2067

Telephone +61 2 9417 8400
Facsimile +61 2 9417 8337
Email email@hhconsult.com.au
Web www.henryandhymas.com.au

henry&hymas

Project
HAWKINS VILLAGE
3 NORTHVILLE DRIVE EDGEWORTH NSW

Title
ROAD TYPICAL SECTIONS AND DETAILS

Drawn	Designed	Date
M.Cerna	I.Ahmed	JAN 2019
Checked	Approved	Scale @A1
A.Francis	A.Francis	AS NOTED

Drawing number: 17999_DA_C151

Revision: 03

TYPICAL PIT CHAMBER SIZES

IT IS THE CONTRACTORS RESPONSIBILITY TO SELECT PIT CHAMBER SIZE WITH REGARDS TO PIPE SIZE, DEPTH TO INVERT AND SKEW ANGLE. REFER SKETCHES BELOW.

1. SELECT PIT CHAMBER USING THE STEPS BELOW:
2. SELECT PIT CHAMBER SIZE DEPENDING ON THE PIPE DIAMETERS.
3. CHECK PIT CHAMBER SIZE TO SATISFY DEPTH TO INVERT REQUIREMENTS.
   CHECK PIT CHAMBER DIMENSIONS TO SATISFY THE SKEW ANGLE IN THE TABLE.

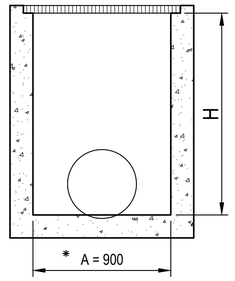

SECTION
NTS

*A = 600 FOR PIPES UP TO 375 DIA.

1 PIT CHAMBER DIMENSIONS FOR PIPES UP TO 600 DIA.

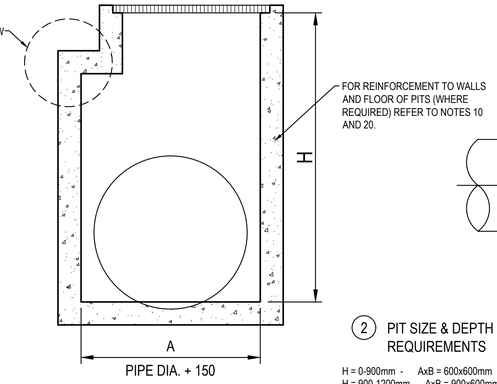

SECTION
NTS

1 PIT CHAMBER FOR PIPES GREATER THAN 600 DIA.

2 PIT SIZE & DEPTH REQUIREMENTS

H = 0-900mm - AxB = 600x600mm
H = 900-1200mm - AxB = 900x600mm
H = >1200mm - AxB = 900x900mm

FOR B = 600mm - MAX. SIDE ENTRY PIPE AT 45° SKEW = 225mm
FOR B = 900mm - MAX. SIDE ENTRY PIPE AT 45° SKEW = 375mm
FOR B = 1200mm - MAX. SIDE ENTRY PIPE AT 45° SKEW = 600mm
FOR B = 1500mm - MAX. SIDE ENTRY PIPE AT 45° SKEW = 825mm
FOR B = 1900mm - MAX. SIDE ENTRY PIPE AT 45° SKEW = 1050mm

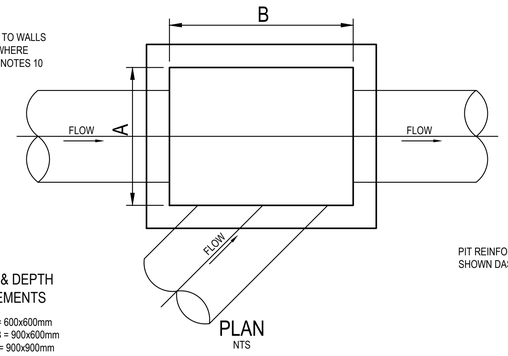

PLAN
NTS

3 PIT CHAMBER FOR SIDE ENTRY ON SKEW

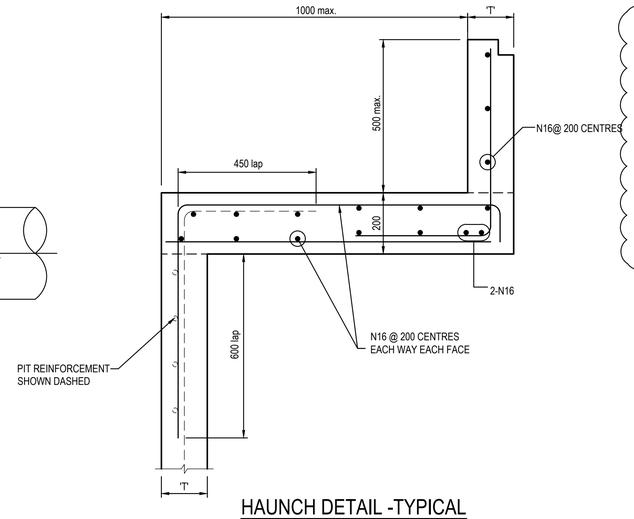

HAUNCH DETAIL -TYPICAL
SCALE 1:10

PIT LID SCHEDULE

PIT/STRUCTURE NUMBER	DESCRIPTION
A-1, A-2, A-3, A-4, C-1, C-2, D-1, D-2	ON GRADE KERB INLET PIT WITH 1.8m LINTEL WITH OCEAN PROTECTS ENVIROPOD AND HEAVY DUTY GRATED LID CLASS "D" IN ACCORDANCE WITH LAKE MACQUARIE CITY COUNCIL REQUIREMENTS.
A-10, A-11, A-11a, A-12, A-13, A-14, C-3	INLET PIT WITH 900x900 HINGED LIGHT DUTY GRATED LID CLASS "B" IN ACCORDANCE WITH LAKE MACQUARIE CITY COUNCIL REQUIREMENT.
F-1, F-2	OSD TANK ACCESS OPENING WITH 900x900 HINGED MEDIUM DUTY GRATED LID CLASS "C" WITH LOCK-DOWN SYSTEM
E-1, E-2, E-3, A-5, A-6, A-7, A-8, A-9 (02)	JUNCTION PIT WITH 900x900 HINGED MEDIUM DUTY CONCRETE LID CLASS "C" IN ACCORDANCE WITH LAKE MACQUARIE CITY COUNCIL REQUIREMENT.
EX-1, EX-2, EX-3, EX-4	EXISTING STORMWATER PITS TO REMAIN
SD-1	300mm WIDE HEAVY DUTY GRATED DRAIN AND HEAVY DUTY FRAME CLASS "D" IN ACCORDANCE WITH LAKE MACQUARIE CITY COUNCIL REQUIREMENTS.
H-1, H-2, H-3 (02)	PRECAST ROCLA HEADWALL TO SUIT PROPOSED STORMWATER PIPE OR APPROVED EQUIVALENT
G-1	RAISED GRATED 1200x1200 "LETTERBOX" PIT CLASS "B" IN ACCORDANCE WITH LAKE MACQUARIE CITY COUNCIL REQUIREMENT.
D-3 (02)	SURFACE INLET PIT WITH 1200x1200 HINGED LIGHT DUTY GRATED LID CLASS "B" IN ACCORDANCE WITH LAKE MACQUARIE CITY COUNCIL REQUIREMENT.

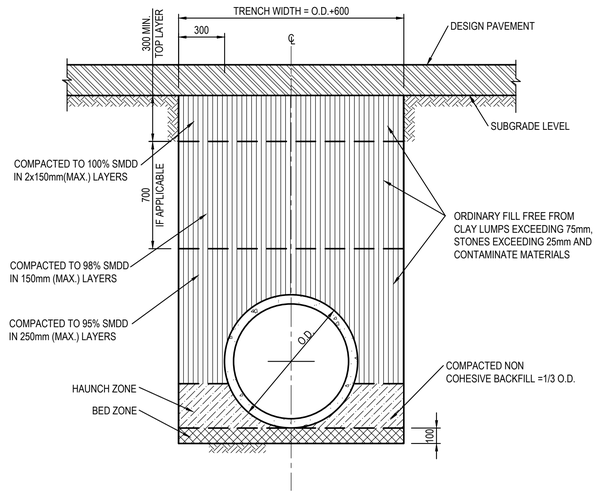

PIPE TRENCH INSTALLATION BENEATH PAVEMENT
(H1 & H2 SUPPORT)
SCALE 1:20

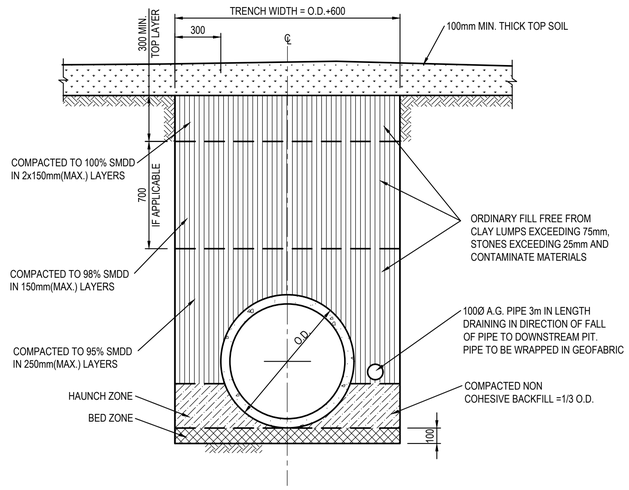

PIPE TRENCH INSTALLATION IN LANDSCAPE AREAS
(H1 & H2 SUPPORT)
SCALE 1:20

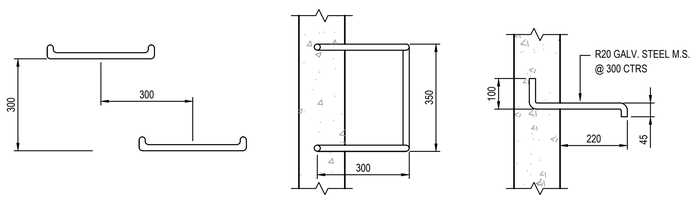

ELEVATION PLAN SECTION

TYPICAL STEP IRON DETAIL
SCALE 1:10

DRAINAGE NOTES:

1. ALL STORMWATER WORK TO COMPLY WITH AS 3500 PART 3.

2. CONTRACTOR SHALL BE RESPONSIBLE FOR MAINTAINING THE MINIMUM COVER OF 600mm ON ALL PIPES.

3. PROTECTION OF PIPES DUE TO LOADS EXCEEDING W7 WHEEL LOAD SHALL BE THE CONTRACTOR'S RESPONSIBILITY.

4. BEDDING TYPE SHALL BE TYPE H2 FOR RCP. WHERE NECESSARY THE OVERLAY ZONE SHALL BE REDUCED TO ACCOMMODATE PAVEMENT REQUIREMENTS. REFER TO THIS DRAWING FOR DETAILS.

5. MINIMUM COVER OVER EXISTING PIPES FOR PROTECTION DURING CONSTRUCTION SHALL BE 800mm.

6. NO CONSTRUCTION LOADS SHALL BE APPLIED TO PLASTIC PIPES.

7. FINISHED SURFACE LEVELS SHOWN ON LAYOUT PLAN DRGS TAKE PRECEDENCE OVER DESIGN DRAINAGE SURFACE LEVELS.

8. ALL PIPES UP TO AND INCLUDING 300 DIA. SHALL BE SOLVENT OR RUBBER RING JOINTED PVC CLASS SH PIPE TO AS1260. ALL OTHER PIPES TO BE RCP USING CLASS 2 RUBBER RING JOINTED PIPE. HARDIES FRC PIPE MAY BE USED IN LIEU OF RCP IF DESIRED IN GROUND. ALL AERIAL PIPES TO BE PVC CLASS SH.

9. ALL PITS IN NON TRAFFICABLE AREAS TO BE PREFABRICATED POLYESTER CONCRETE "POLYCRETE" WITH "LIGHT DUTY" CLASS B GALV. MILD STEEL GRATING AND FRAME.
ALL PITS IN TRAFFICABLE AREAS (CLASS "D" LOADING MAX) TO HAVE 150mm THICK CONCRETE WALLS AND BASE CAST IN-SITU f'c=32 MPa, REINFORCED WITH N12-200 BOTH LOADING WAYS CENTRALLY PLACE .U.N.O. ON SEPARATE DESIGN DRAWINGS IN THIS SET. GALV.MILD STEEL GRATING AND FRAME TO SUIT DESIGN LOADING. PRECAST PITS, RECTANGULAR OR CIRCULAR IN SHAPE, MAY BE USED IN LIEU AND SHALL COMPLY WITH RELEVANT AUSTRALIAN STANDARDS.

10. ALL PITS, GRATINGS AND FRAMES SHALL BE INSTALLED IN ACCORDANCE WITH THE MANUFACTURERS SPECIFICATION AND TO BE IN ACCORDANCE WITH AS3500.3 AND AS3996.

11. PIT CHAMBER DIMENSIONS ARE TO BE SELECTED TO SATISFY THE FOLLOWING:
- PIPE SIZE
- DEPTH TO INVERT
- SKEW ANGLE
  REFER TYPICAL PIT CHAMBER DETAILS BELOW
IF PIT LID SIZE IS SMALLER THAN THE PIT CHAMBER SIZE THEN THE PIT LID IS TO BE CONSTRUCTED ON THE CORNER OF THE PIT CHAMBER WITH THE STEP IRONS DIRECTLY BELOW. ALTERNATIVELY THE PIT LID TO BE USED, IS TO BE THE SAME SIZE AS THE PIT CHAMBER.

12. FOR PIPE SIZES GREATER THAN Ø300mm, PIT FLOOR IS TO BE BENCHED TO FACILITATE FLOW.

13. GALVANISED STEP IRONS SHALL BE PROVIDED AT 300 CTS FOR PITS HAVING A DEPTH EXCEEDING 1200mm. SUBSOIL DRAINAGE PIPE SHALL BE PROVIDED IN PIPE TRENCHES ADJACENT TO INLET PIPES. (MINIMUM LENGTH 3m).

14. ALL SUBSOIL PIPES SHALL BE 100mm SLOTTED PVC IN A FILTER SOCK, UNO, WITH 3m INSTALLED UPSTREAM OF ALL PITS.

15. ALL PIPEWORK SHALL HAVE MINIMUM DIAMETER 100.

16. MINIMUM GRADE FOR ROOFWATER DRAINAGE LINES SHALL BE 1%.

17. ALL PIPE JUNCTIONS AND TAPER UP TO AND INCLUDING 300 DIA. SHALL BE VIA PURPOSE MADE FITTINGS.

18. ALL ROOF DRAINAGE TO BE INSTALLED IN ACCORDANCE WITH AS3500, PART 3. TESTING TO BE UNDERTAKEN AND REPORTS PROVIDED TO THE SUPERINTENDENT.

19. LOCATION OF THE DIRECT DOWN PIPE CONNECTIONS MAY VARY ON SITE TO SUIT SITE CONDITIONS, WHERE CONNECTION SHOWN ON LONG SECTIONS CHAINAGES ARE INDICATIVE ONLY.

20. PITS IN EXCESS OF 1.5 m DEEP TO HAVE WALL AND FLOOR THICKNESS INCREASED TO 200mm. REINFORCED WITH N12@200 CTS CENTRALLY PLACED BOTH WAYS THROUGHOUT U.N.O.ON SEPARATE DESIGN DRAWINGS IN THIS SET. IF DEPTH EXCEEDS 5m CONTACT ENGINEER.

21. SUBSOIL DRAINAGE LINES FOR LANDSCAPE AREA NOT SHOWN ON THESE DRAWINGS. REFER TO LANDSCAPING PLANS FOR DETAILS.

22. ALL STORMWATER PITS TO HAVE Ø100 uPVC SLOTTED SUBSOIL PIPES CONNECTED TO THEM. THESE SUBSOILS TO EXTEND 3m UPSTREAM OF THE PIT AT A MINIMUM GRADE.

FOR DA ONLY

0 200 400 600 800 1000mm
200 100
SCALE 1:10

0 400 800 1200 1600 2000mm
400 200
SCALE 1:20

SURVEY INFORMATION
SURVEYED BY
RPS AUSTRALIA EAST PTY LTD
DATUM: A.H.D.

REVISION	AMENDMENT	DRAWN	DESIGNED	DATE
02	ISSUED FOR DA	MC	IA	09.07.2019
01	ISSUED FOR DA	MC	IA	15.02.2019

Client: ROYAL FREEMASONS' BENEVOLENT INSTITUTION
Architect: CALDER FLOWER ARCHITECTURE

This drawing and design remains the property of Henry & Hymas and may not be copied in whole or in part without the prior written approval of Henry & Hymas.

Level 5,
79 Victoria Avenue
Chatswood NSW 2067
Telephone +61 2 9417 8400
Facsimile +61 2 9417 8337
Email email@hhconsult.com.au
Web www.henryandhymas.com.au
henry&hymas

Project: HAWKINS VILLAGE
3 NORTHVILLE DRIVE EDGEWORTH NSW

Title: STORMWATER MISCELLANEOUS DETAILS AND PIT LID SCHEDULE

Drawn	Designed	Date
M.Cerna	I.Ahmed	JAN 2019
Checked	Approved	Scale @A1
A.Francis	A.Francis	AS NOTED

Drawing number: 17999_DA_C200
Revision: 02

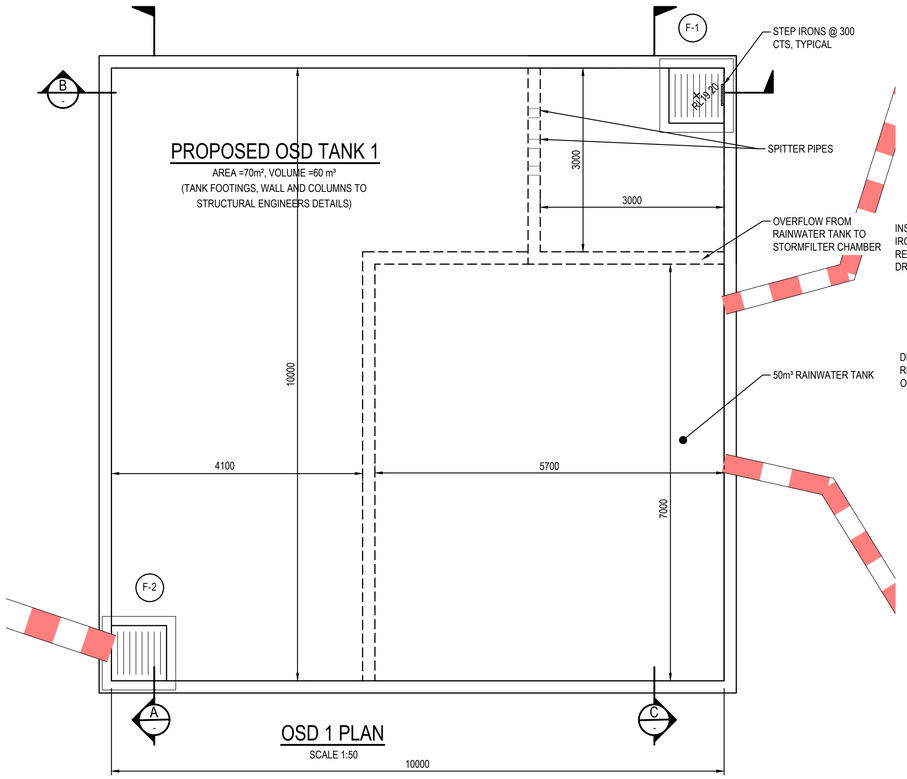

OSD 1 PLAN
SCALE 1:50

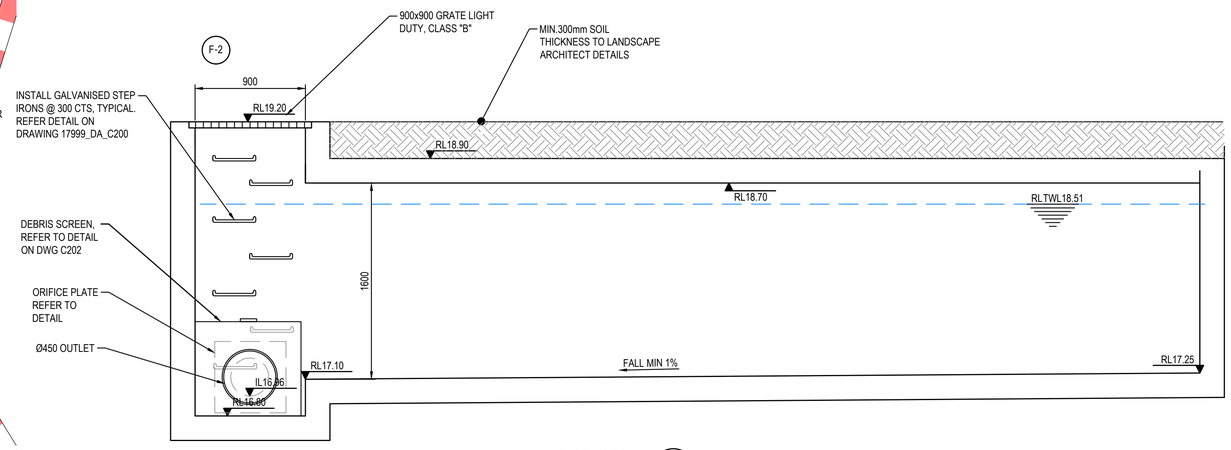

SECTION A
SCALE: 1:25

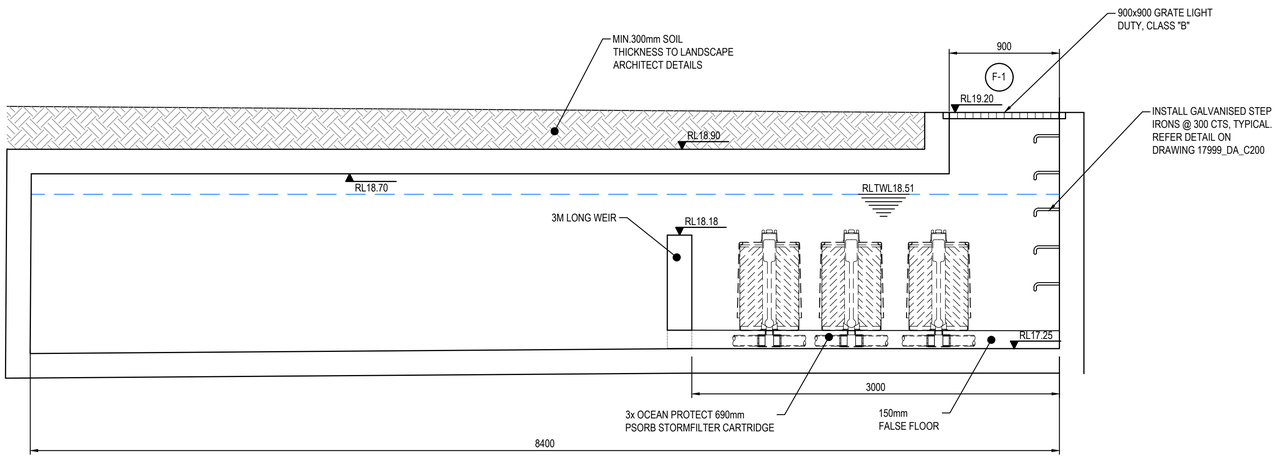

SECTION B
SCALE: 1:25

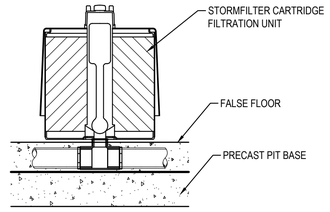

STORMFILTER CARTRIDGE DETAIL

CONFINED SPACE DANGER SIGN

DANGER
CONFINED SPACE
NO ENTRY WITHOUT CONFINED SPACE TRAINING

COLOURS:		
	DANGER AND BACKGROUND	WHITE
	ELLIPTICAL AREA	RED
	RECTANGLE CONTAINING ELLIPSE	BLACK
	OTHER LETTERING AND BOARDER	BLACK

A) A CONFINED SPACE DANGER SIGN SHALL BE POSITIONED IN A LOCATION SUCH THAT IT IS CLEARLY VISIBLE TO PERSONS PROPOSING TO ENTER THE BELOW GROUND TANKS/ CONFINED SPACE AT ALL ACCESS POINTS OF THE TANK/ CONFINED SPACE.
B) SIGN TO BE MINIMUM DIMENSIONS:-300mm x 450mm (LARGE ENTRIES SUCH AS DOORS) 250mm x 180mm (SMALL ENTRIES I.E.. GRATES, MANHOLES)
C) SIGN SHALL BE MANUFACTURED FROM COLOUR BONDED METAL OR POLYPROPYLENE
D) SIGN SHALL BE AFFIXED TO A SURFACE WITH SCREWS AT EACH CORNER.

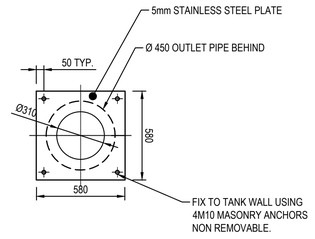

ORIFICE PLATE DETAIL
SCALE 1:20

03

0 1000 2000 3000 4000 5000mm
1000 600 200
SCALE 1:50

0 500 1000 1500 2000 2500mm
500 300 100
SCALE 1:25

0 400 800 1200 1600 2000mm
400 200
SCALE 1:20

FOR DA ONLY

SURVEY INFORMATION
SURVEYED BY
RPS AUSTRALIA EAST PTY LTD
DATUM: A.H.D.

REVISION	AMENDMENT	DRAWN	DESIGNED	DATE	REVISION	AMENDMENT	DRAWN	DESIGNED	DATE
03	ISSUED FOR DA	MC	IA	09.07.2019					
02	ISSUED FOR DA	MC	IA	04.03.2019					
01	ISSUED FOR DA	MC	IA	15.02.2019					

Client
ROYAL FREEMASONS' BENEVOLENT INSTITUTION

Architect
CALDER FLOWER ARCHITECTURE

This drawing and design remains the property of Henry & Hymas and may not be copied in whole or in part without the prior written approval of Henry & Hymas.

Level 5,
79 Victoria Avenue
Chatswood NSW 2067

Telephone +61 2 9417 8400
Facsimile +61 2 9417 8337
Email email@hhconsult.com.au
Web www.henryandhymas.com.au

henry&hymas

Project
HAWKINS VILLAGE
3 NORTHVILLE DRIVE EDGEWORTH NSW

Title
OSD TANK 1, PLAN, SECTIONS AND DETAILS
SHEET 1 OF 2

Drawn	Designed	Date
M.Cerna	I.Ahmed	JAN 2019
Checked	Approved	Scale @A1
A.Francis	A.Francis	AS NOTED

Drawing number 17999_DA_C201
Revision 03

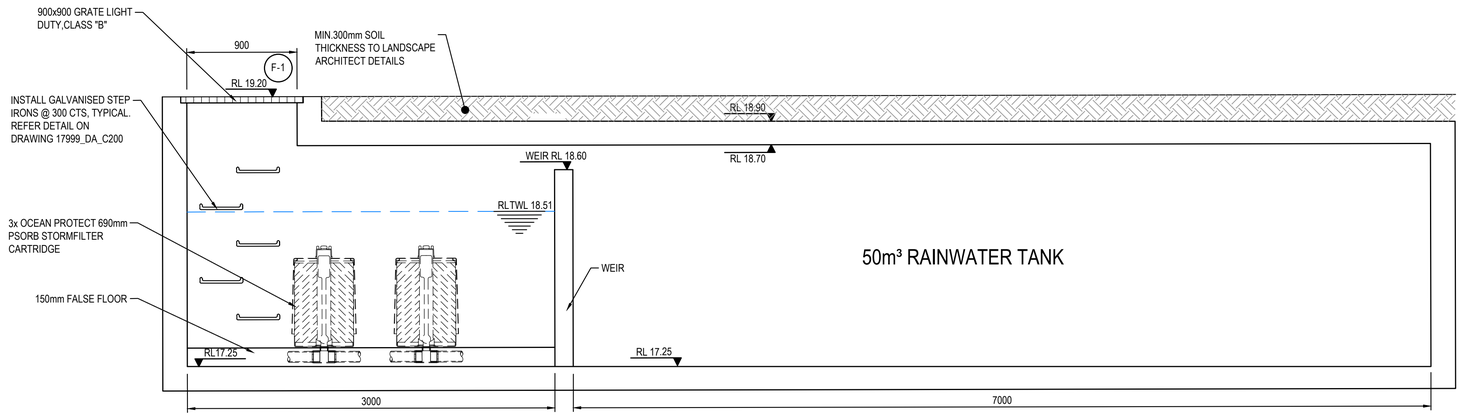

SECTION C
SCALE: 1:25

03

100 x 16 MOUNTING BAR WITH BRACKETS, SCREEN TO BE ATTACHED (GENERALLY ON A SLIDING MECHANISM) TO THE WALL, BUT SHOULD BE REMOVABLE (WITHOUT THE USE OF TOOLS) TO PERMIT CLEANSING AND EASY INSPECTION OF THE OUTLET CONTROL. ALL STEEL TO BE HOT DIPPED GALVANISED.

SCREEN TYPE WELDLOK A40/203 IS RECOMENDED FOR ORIFICES LARGER THAN 150mm AND SCREEN AREA 20 x THE ORIFICE AREA FOR THAT TYPE OF SCREEN - REFER UPRCT SECTION 4-13

MAXIMESH RH3030 IS RECOMMENDED FOR ORIFICES LESS THAN 150mm IN DIAMETER AND SCREEN AREA 50xTHE ORIFICE AREA REFER BURWOOD COUNCIL AND UPPER PARRAMATTA RIVER CATCHMENT TRUST HANDBOOK.

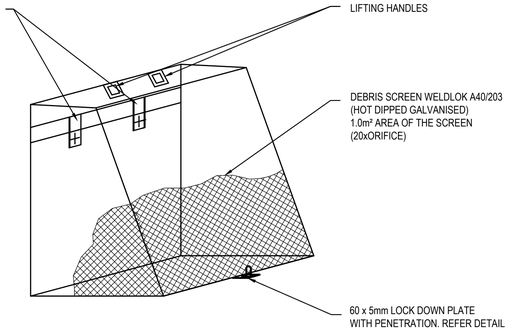

DEBRIS SCREEN DETAIL
NOT TO SCALE
ALL STEEL TO BE HOT DIPPED GALVANISED

0 500 1000 1500 2000 2500mm
500 300 100
SCALE 1:25

FOR DA ONLY

REVISION	AMENDMENT	DRAWN	DESIGNED	DATE	REVISION	AMENDMENT	DRAWN	DESIGNED	DATE
03	ISSUED FOR DA	MC	IA	09.07.2019					
02	ISSUED FOR DA	MC	IA	04.03.2019					
01	ISSUED FOR DA	MS	IA	15.02.2019					

Client
ROYAL FREEMASONS' BENEVOLENT INSTITUTION

Architect
CALDER FLOWER ARCHITECTURE

This drawing and design remains the property of Henry & Hymas and may not be copied in whole or in part without the prior written approval of Henry & Hymas.

Level 5,
79 Victoria Avenue
Chatswood NSW 2067

Telephone +61 2 9417 8400
Facsimile +61 2 9417 8337
Email email@hhconsult.com.au
Web www.henryandhymas.com.au

henry&hymas

Project
HAWKINS VILLAGE
3 NORTHVILLE DRIVE EDGEWORTH NSW

Title
OSD TANK 1, PLAN, SECTIONS AND DETAILS
SHEET 2 OF 2

Drawn	Designed	Date
M.Cerna	I.Ahmed	JAN 2019
Checked	Approved	Scale @A1
A.Francis	A.Francis	AS NOTED

Drawing number: 17999_DA_C202
Revision: 03

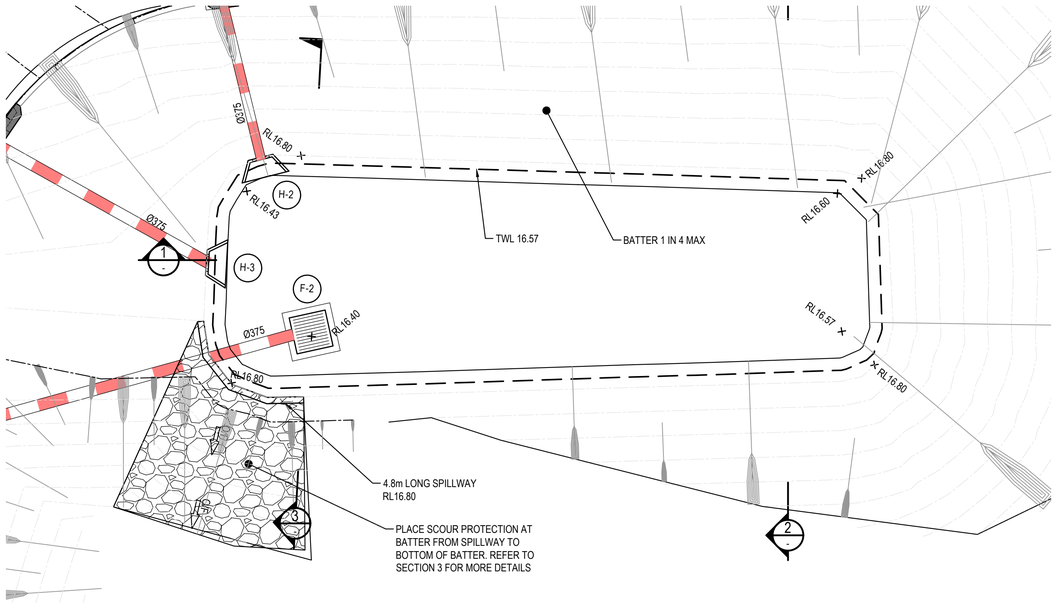

ABOVE GROUND OSD TANK PLAN

SCALE 1:100

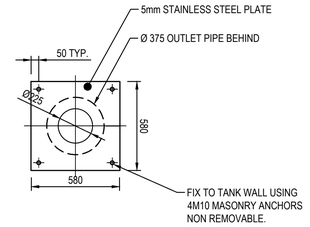

ORIFICE PLATE DETAIL

SCALE 1:20

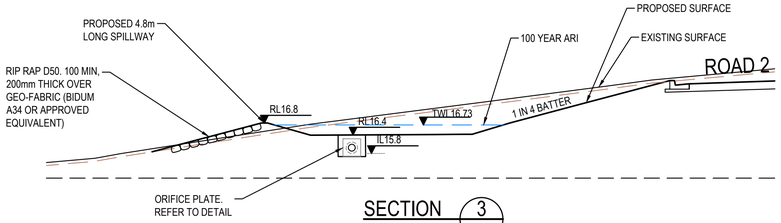

SECTION 3

SCALE: 1:100

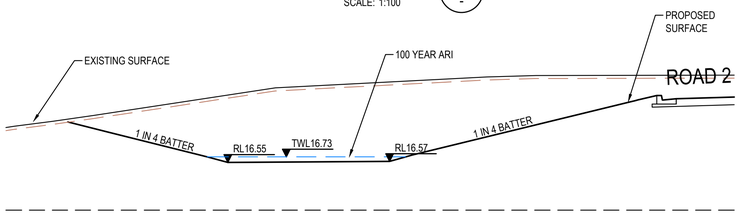

SECTION 2

SCALE: 1:100

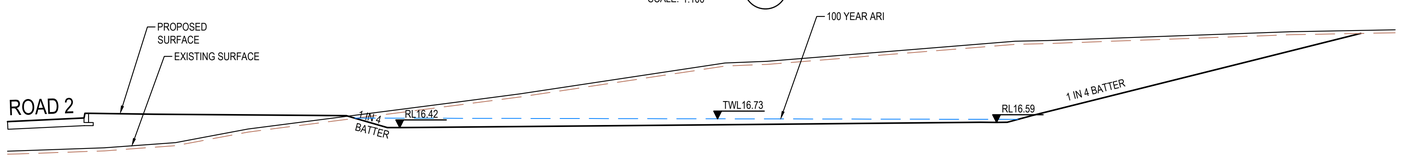

SECTION 1

SCALE: 1:100

0 2 4 6 8 10m

2 1

SCALE 1:100

FOR DA ONLY

REVISION	AMENDMENT	DRAWN	DESIGNED	DATE	REVISION	AMENDMENT	DRAWN	DESIGNED	DATE
01	ISSUED FOR DA	MC	IA	09.07.2019					

Client
ROYAL FREEMASONS' BENEVOLENT INSTITUTION

Architect
CALDER FLOWER ARCHITECTURE

This drawing and design remains the property of Henry & Hymas and may not be copied in whole or in part without the prior written approval of Henry & Hymas.

Level 5,
79 Victoria Avenue
Chatswood NSW 2067

Telephone
+61 2 9417 8400
Facsimile
+61 2 9417 8337
Email
email@hhconsult.com.au
Web
www.henryandhymas.com.au

henry&hymas

Project
HAWKINS VILLAGE
3 NORTHVILLE DRIVE EDGEWORTH NSW

Title
ABOVE GROUND OSD TANK
PLAN, SECTIONS AND DETAILS

Drawn	Designed	Date
M.Cerna	I.Ahmed	JAN 2019
Checked	Approved	Scale @A1
A.Francis	A.Francis	AS NOTED

Drawing number: 17999_DA_C203

Revision: 01

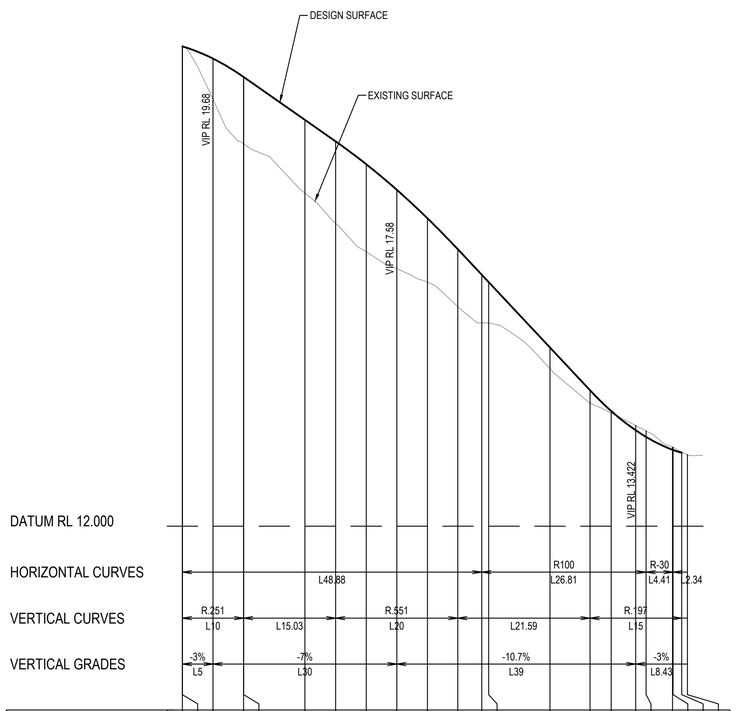

DESIGN	19.830	19.830	19.630	19.331	19.330	18.630	18.278	17.907	17.489	17.024	16.520	16.100	15.981	14.915	14.217	13.879	13.565	13.457	13.248	13.244	13.197	13.169
EXISTING LEVELS		18.966	18.241	18.240	17.435	16.940	16.480	16.203	15.982	15.586	15.319	15.315	14.570	14.004	13.849	13.644	13.555	13.289	13.286	13.213	13.169
CHAINAGE	0	0.002	5	9.988	10	20	25.023	30	35	40	44.945	48.877	50	60	66.539	70	74	75.69	80	80.095	81.5	82.433

ROAD 1 - LONGITUDINAL SECTION

A1 HORZ SCALE 1:500
A1 VERT SCALE 1:50

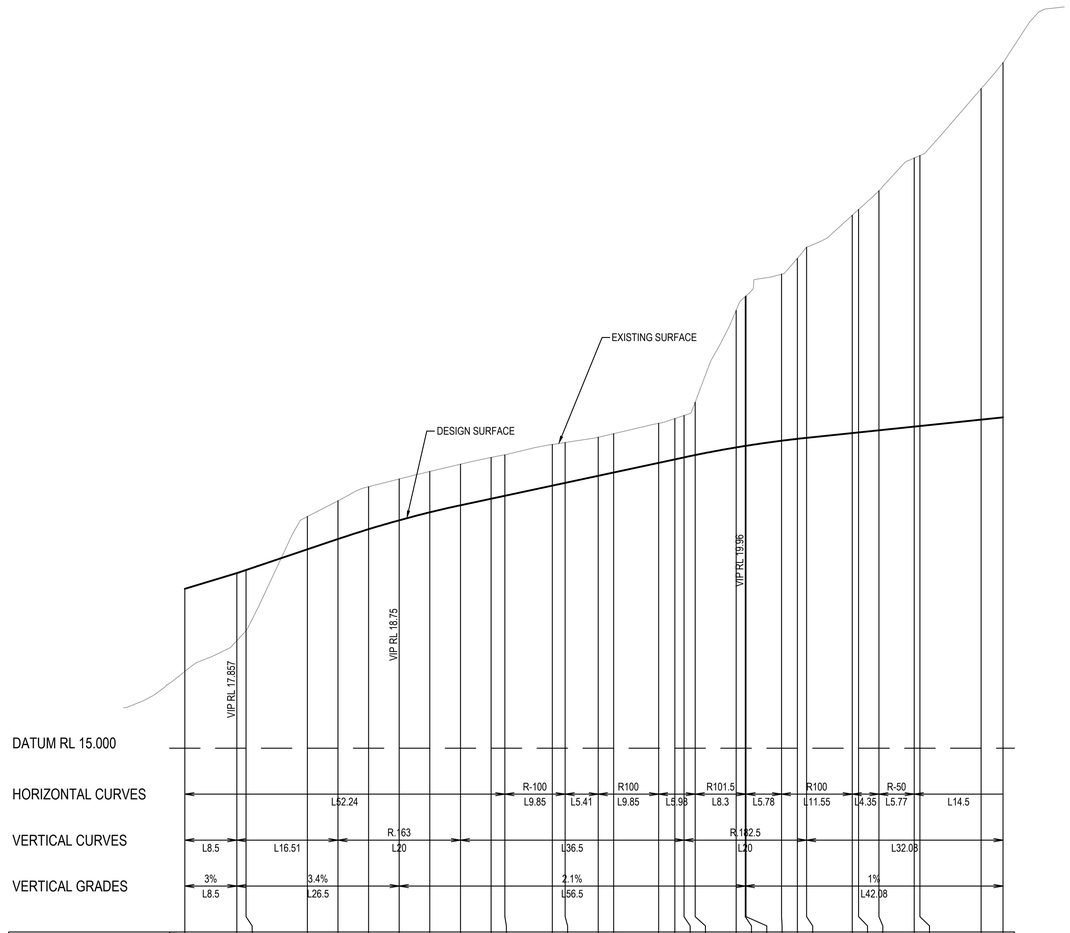

DESIGN	17.602	17.857	17.908	18.245	18.413	18.574	18.719	18.849	18.964	19.071	19.119	19.285	19.330	19.446	19.500	19.657	19.714	19.746	19.784	19.908	19.933	19.935	20.017	20.048	20.065	20.143	20.153	20.188	20.248	20.258	20.363	20.400
EXISTING LEVELS	16.253	16.755	16.917	18.779	19.037	19.267	19.393	19.516	19.634	19.744	19.768	19.956	19.988	20.074	20.133	20.302	20.379	20.429	20.648	22.146	22.369	22.380	22.735	22.994	23.173	23.697	23.792	24.095	24.631	24.671	25.762	26.188
CHAINAGE	0	8.5	10	20	25.006	30	35	40	44.998	50	52.245	60	62.09	67.497	70	77.342	80	81.502	83.325	90	91.5	91.627	97.409	100	101.5	108.955	110	113.307	119.08	120	130	133.58

ROAD 2 - LONGITUDINAL SECTION

A1 HORZ SCALE 1:500
A1 VERT SCALE 1:50

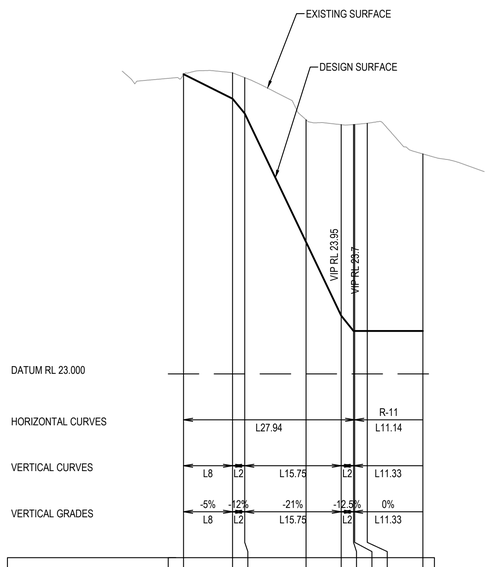

DESIGN LEVELS	27.890	27.490	27.250	25.155	23.950	23.700	23.700	23.700	23.700
EXISTING LEVELS	27.890	27.913	27.834	27.147	27.067	27.068	27.070	27.090	26.589
CHAINAGE	0	8	10	20	25.75	27.75	27.944	30	39.082

DRIVEWAY RAMP TO LEVEL 2 CARPARK LONGITUDINAL SECTION

A1 HORZ SCALE 1:500
A1 VERT SCALE 1:50

0 1000 2000 3000 4000 5000mm
1000 600 200
SCALE 1:50

0 10 20 30 40 50m
10 8 6 4 2
SCALE 1:500

FOR DA ONLY

SURVEY INFORMATION
SURVEYED BY
RPS AUSTRALIA EAST PTY LTD
DATUM: A.H.D.

REVISION	AMENDMENT	DRAWN	DESIGNED	DATE
03	ISSUED FOR DA	MC	IA	09.07.2019
03	ISSUED FOR DA	MC	IA	04.03.2019
02	ISSUED FOR DA	MC	IA	20.02.2019
01	ISSUED FOR DA	MC	IA	15.02.2019

Client
ROYAL FREEMASONS' BENEVOLENT INSTITUTION

Architect
CALDER FLOWER ARCHITECTURE

This drawing and design remains the property of Henry & Hymas and may not be copied in whole or in part without the prior written approval of Henry & Hymas.

Level 5,
79 Victoria Avenue
Chatswood NSW 2067

Telephone +61 2 9417 8400
Facsimile +61 2 9417 8337
Email email@hhconsult.com.au
Web www.henryandhymas.com.au

henry&hymas

Project
HAWKINS VILLAGE
3 NORTHVILLE DRIVE EDGEWORTH NSW

Title
ROAD LONGITUDINAL SECTIONS

Drawn	Designed	Date
M.Cerna	I.Ahmed	JAN 2019
Checked	Approved	Scale @A1
A.Francis	A.Francis	AS NOTED

Drawing number
17999_DA_C150

Revision
04